US 20220249276A1

(19) United States

(12) Patent Application Publication

(10) Pub. No.: US 2022/0249276 A1

(43) Pub. Date: Aug. 11, 2022

Bass, JR. et al.

(54) MARE INTRAUTERINE DEVICE

(71) Applicant: **WiSys Technology Foundation, Inc.**, Madison, WI (US)

(72) Inventors: **Casie Bass, JR.**, Spring Valley, WI (US); **John Obielodan**, Platteville, WI (US)

(21) Appl. No.: **17/669,894**

(22) Filed: **Feb. 11, 2022**

Related U.S. Application Data

(60) Provisional application No. 63/148,322, filed on Feb. 11, 2021.

Publication Classification

(51) **Int. Cl.**
A61F 6/18 (2006.01)
A61F 6/14 (2006.01)

(52) **U.S. Cl.**
CPC *A61F 6/18* (2013.01); *A61F 6/142* (2013.01)

(57) **ABSTRACT**

An intrauterine device (IUD) is insertable into a uterus of a mare to suppress estrus and estrus-related behaviors in mares. The IUD may take the form of a weighted ball or sphere that is biocompatible and includes a string attached to the weighted ball for ease of removal by pulling down on the string.

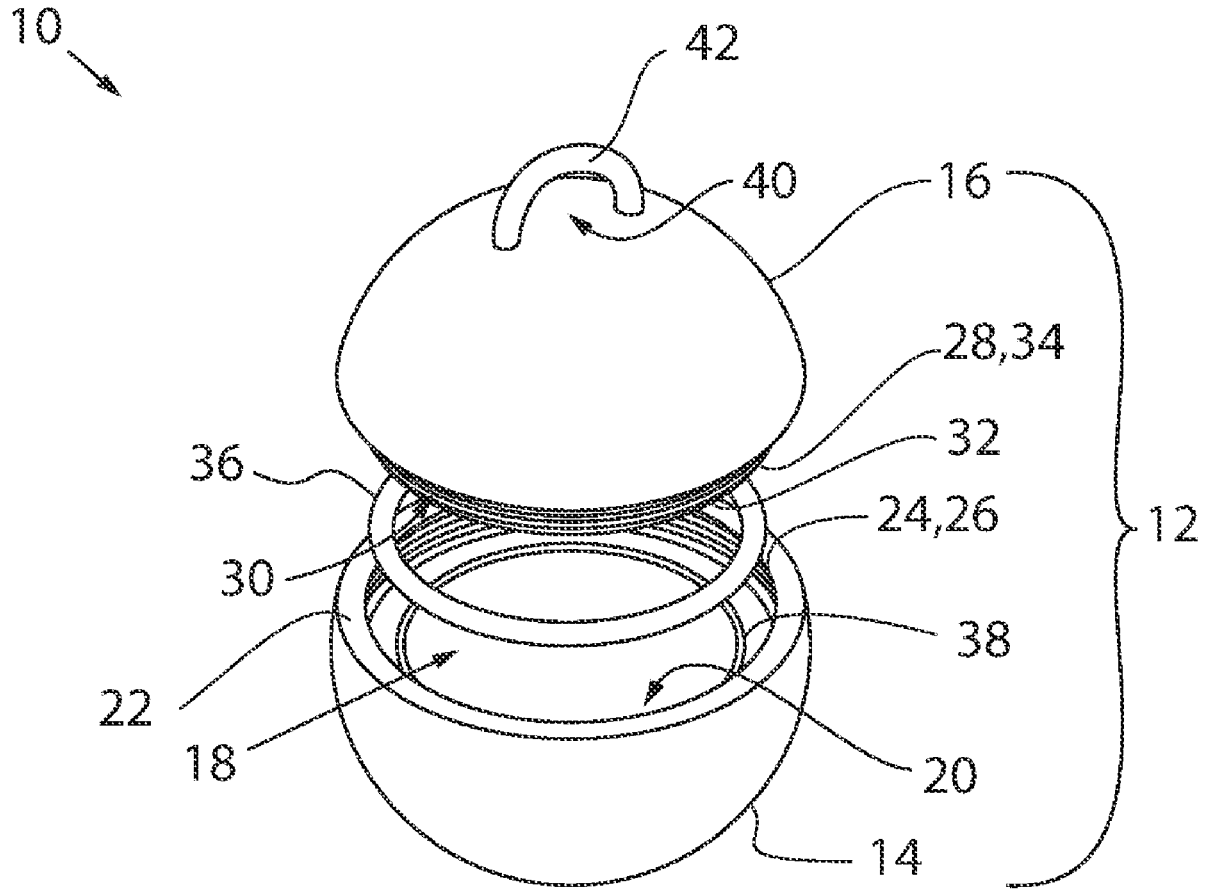

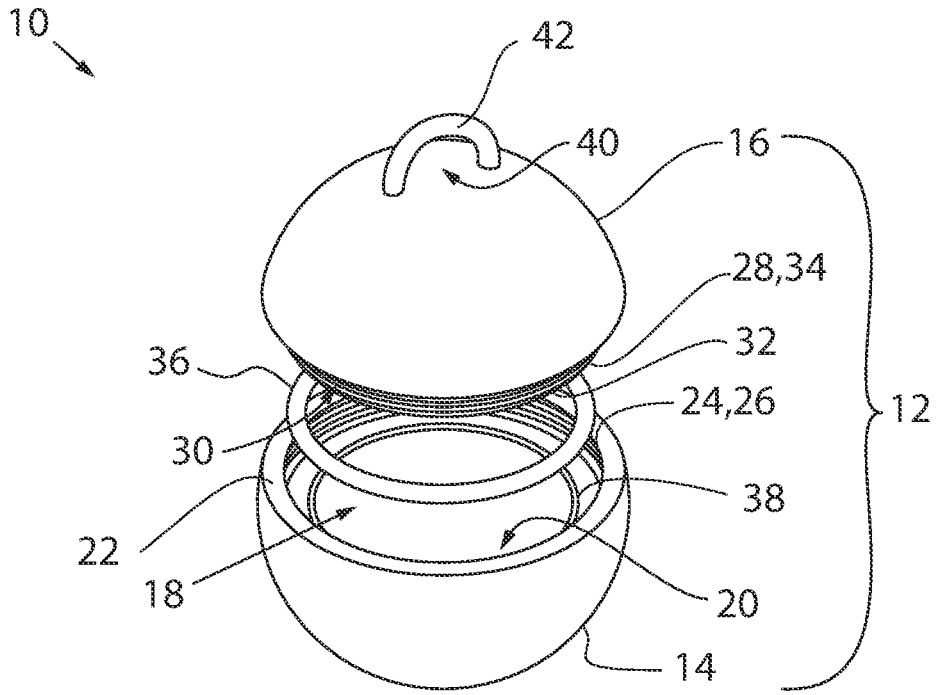
10
42
40
16
28,34
32
36
24,26
12
30
38
22
18
20
14

FIG. 1

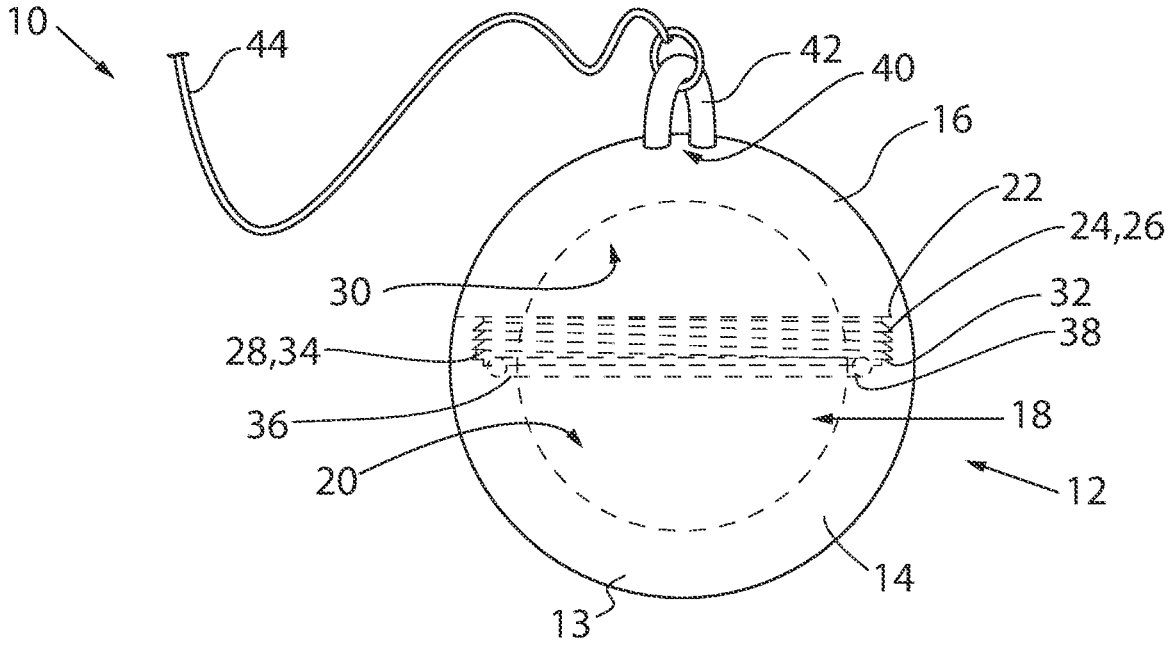
10
44
42
40
16
22
24,26
30
32
38
28,34
36
18
20
12
14
13

FIG. 2

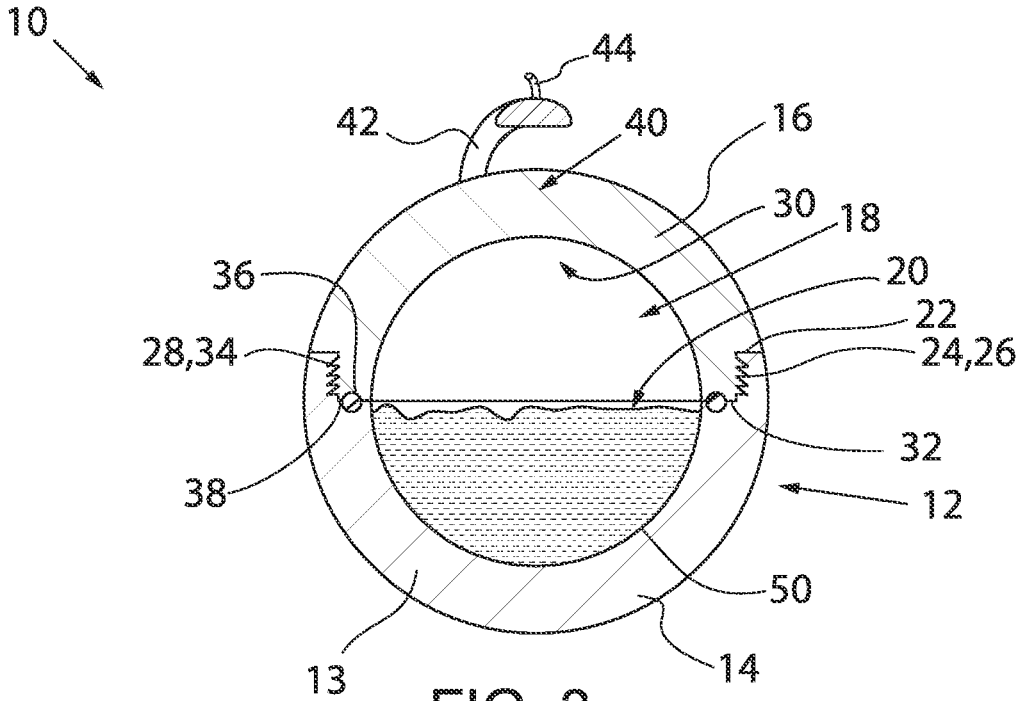
10
44
42
40
16
30
18
36
20
22
28,34
24,26
32
38
12
50
13
14

FIG. 3

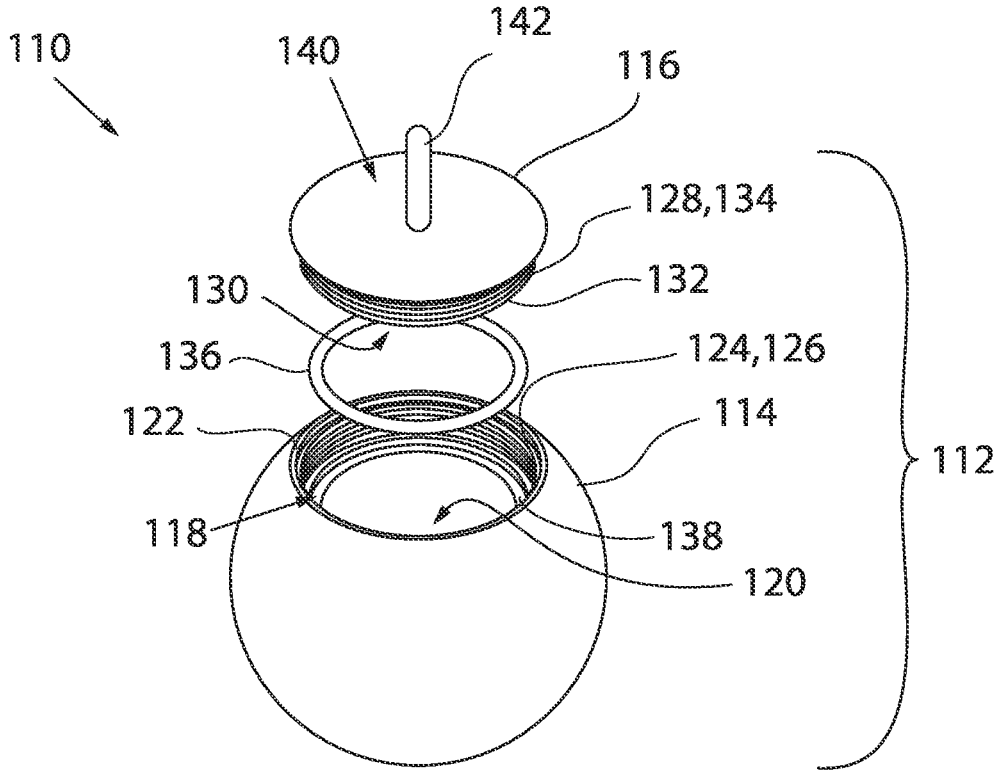
110
140
142
116
128,134
130
132
136
124,126
122
114
112
118
138
120

FIG. 4

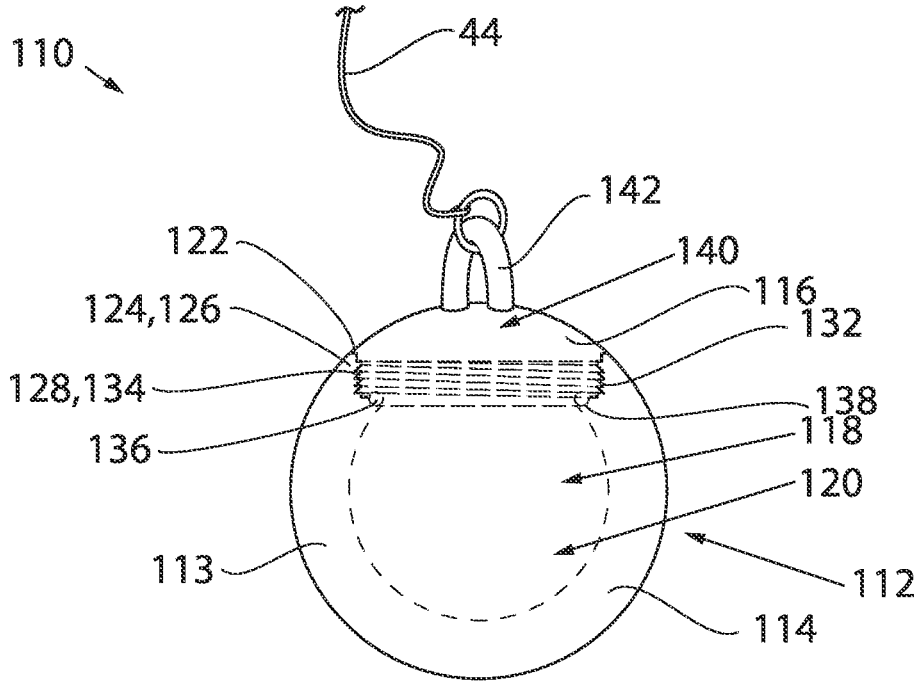
110
44
142
122
140
116
124,126
132
128,134
138
136
118
120
113
112
114

FIG. 5

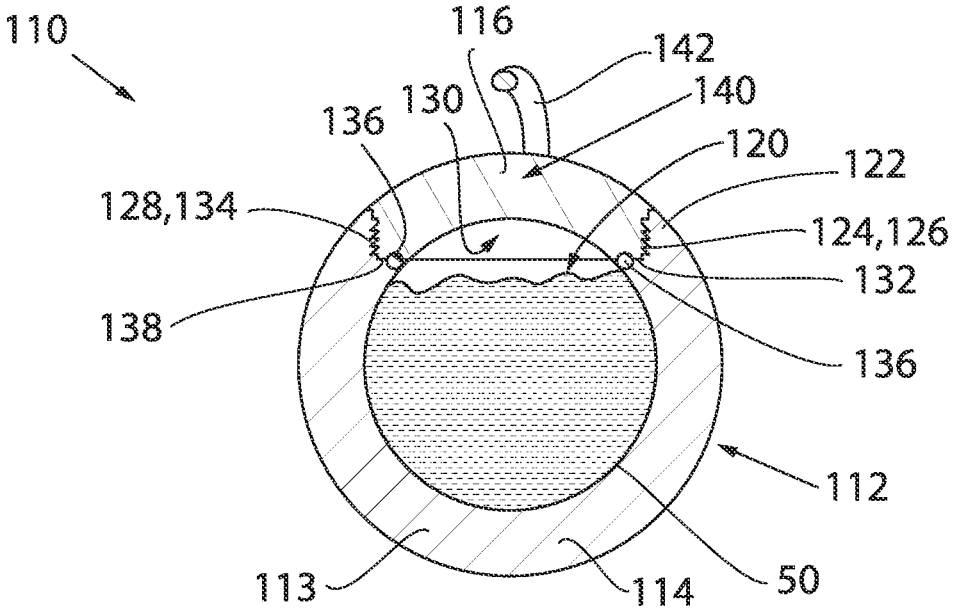
110
116
142
136
130
140
120
122
128,134
124,126
132
138
136
112
113
114
50

FIG. 6

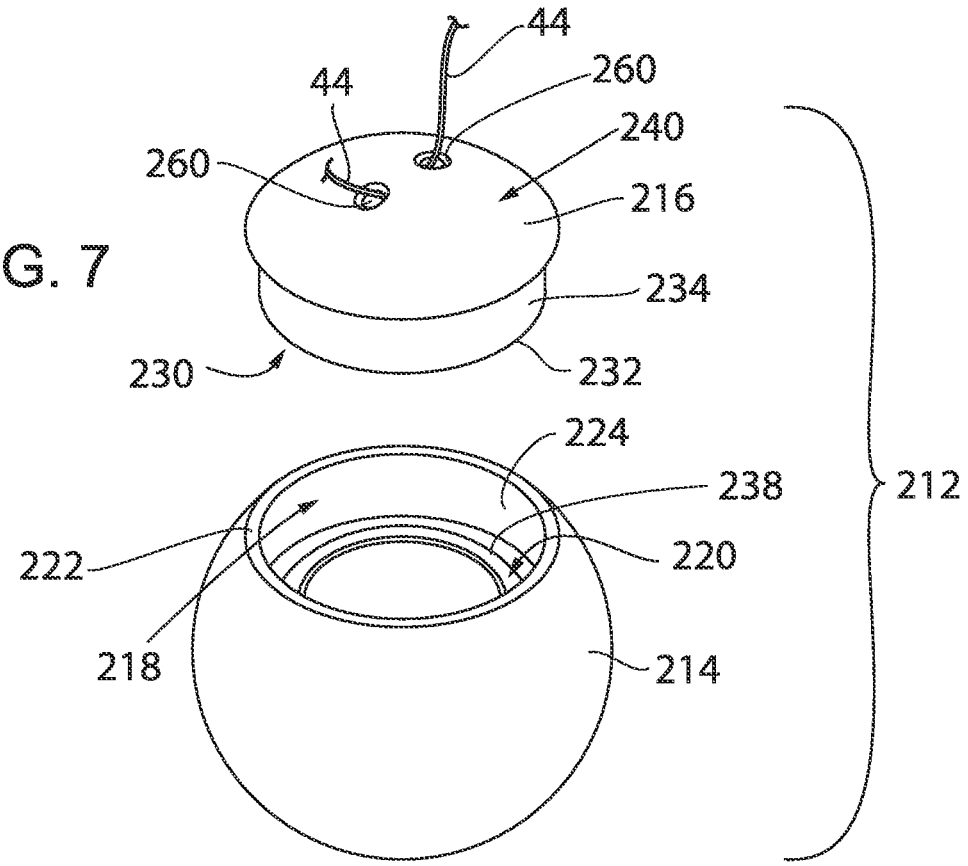
44
44
260
260
240
216
234
230
232
224
238
212
222
220
218
214

FIG. 7

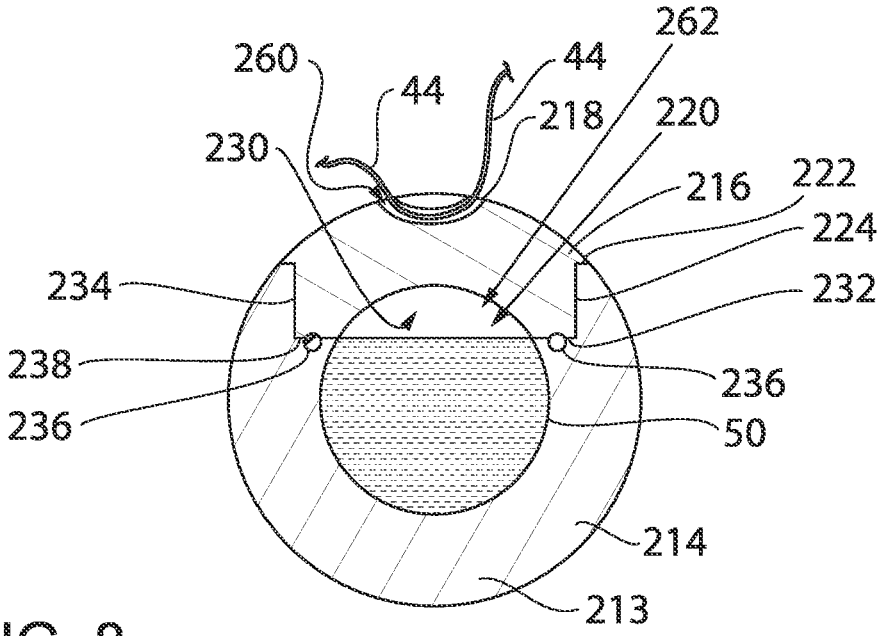
262
260
44
44
218
220
230
216
222
224
234
232
238
236
236
50
214
213

FIG. 8

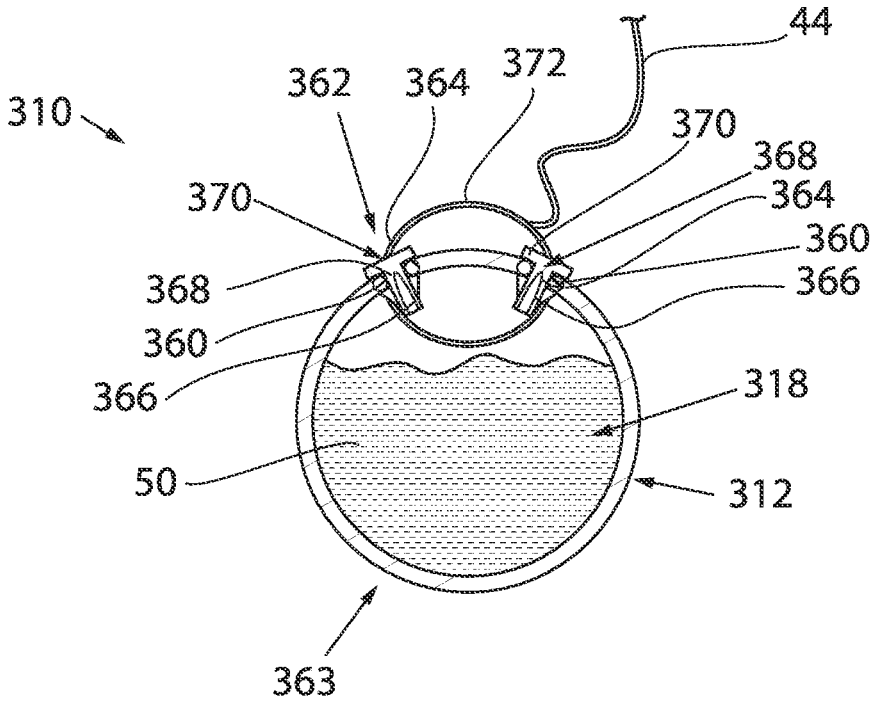
44
310
362
364
372
370
368
364
360
370
368
366
360
366
318
50
312
363

FIG. 10

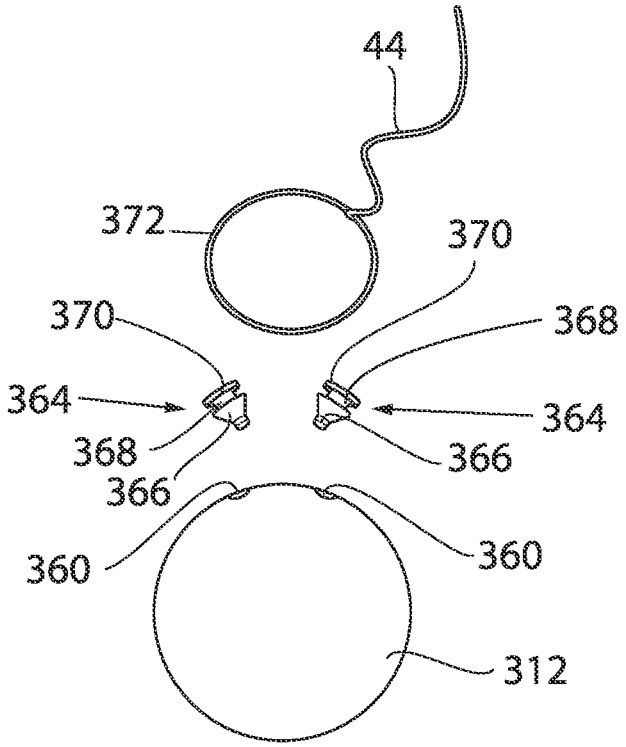
44
372
370
370
368
364
364
368
366
366
360
360
312

FIG. 9

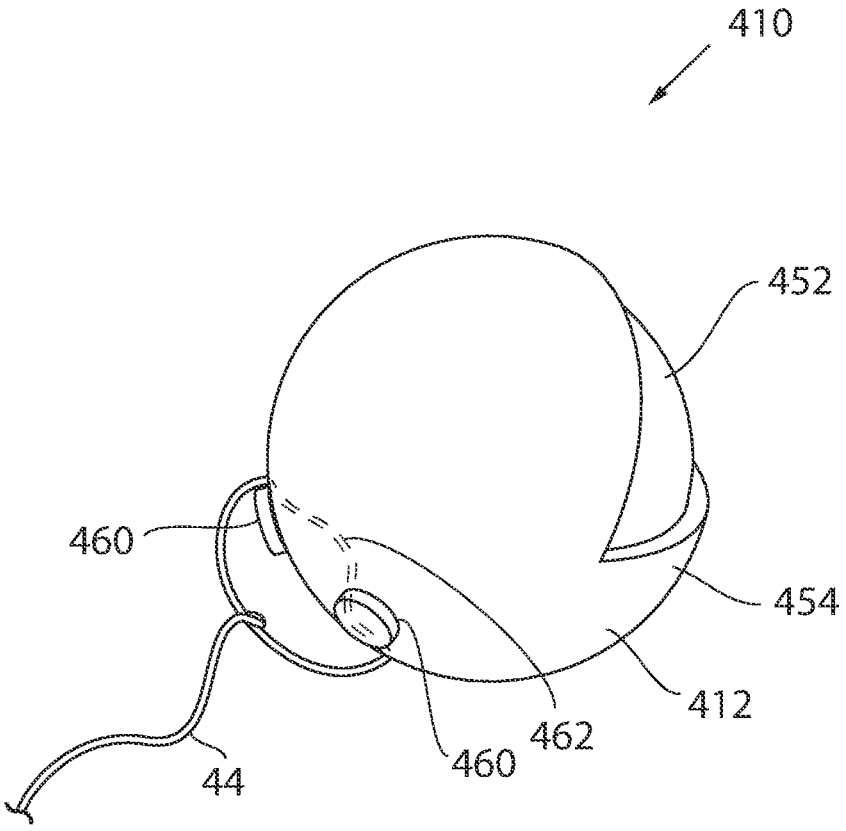

FIG. 11

MARE INTRAUTERINE DEVICE

CROSS REFERENCE TO RELATED APPLICATION

[0001] This application claims the benefit of U.S. Provisional Patent Application No. 63/148,322, filed Feb. 11, 2021, which is incorporated by reference herein in its entirety.

STATEMENT REGARDING FEDERALLY SPONSORED RESEARCH OR DEVELOPMENT

[0002] --

BACKGROUND OF THE INVENTION

[0003] The present invention relates generally to regulating the estrous cycle in mares and, in particular, to a contraceptive device that is inserted into the uterus of the mare to prevent pregnancy.

[0004] Female horses or other equine animals, such as mules and zebras, that are older than four years old are called "mares." The estrous cycle in most mares normalizes in early spring to autumn, which is the normal breeding season for horses. During the cycles, the mare will have an estrous cycle of approximately 19 to 22 days composed of the estrus phase (i.e., in heat) and diestrous phase (i.e., out of heat). Ovulation, the release of the egg from the ovary, occurs any time during the estrus phase but normally occurs 24 to 48 hours before the end of the estrus period. The estrus phase is characterized by a spike in estrogen and estrus-related behaviors that lasts for about a week. The diestrous phase is characterized by a spike in progesterone phase that lasts for about two weeks.

[0005] Estrus-related behaviors during "heat" may include moody or distracted behavior. Owners of mares may desire to suppress undesirable estrus-related behaviors in horses.

[0006] Oral administration of progestin altrenogest, e.g., Regu-Mate, has been one method to suppress estrus but progestin altrenogest may be absorbed into the human skin, potentially disrupting menstrual cycles or causing miscarriages in humans, or contaminating the environment. Another method has been injectable progesterone products that must be injected regularly into the mare, leading to soreness at the injection site.

[0007] Intrauterine devices have also been implemented by, for example, placing a glass marble into the mare's uterus causing the uterus to mimic pregnancy, i.e., to mimic an embryo and to induce chronic uterine inflammation and low-grade prostaglandin (PG) release. This causes the mare to maintain and reform the corpus luteum (CL) thereby maintaining progesterone concentrations and pregnancy. However, some mares suffer major long-term ramifications if the marbles are left in too long (e.g., longer than 18 months) affecting their ability to breed or will prematurely eject the marbles before they can prevent estrus. The marbles may also cause inflammation and infection, may break, or may undesirably adhere to the endometrium.

[0008] Current methods of suppressing undesirable estrus-related behaviors have had limited success with unwanted drawbacks.

SUMMARY OF THE INVENTION

[0009] The present invention provides an intrauterine device (IUD) insertable into a uterus of a mare to suppress estrus and estrus-related behaviors in mares. The IUD may take the form of a weighted ball or sphere that is biocompatible and includes a string attached to the weighted ball for ease of removal by pulling down on the string.

[0010] It is thus one feature of one embodiment of the present invention to provide an IUD that is shatterproof, is well retained within the uterus, and removed after 3 to 18 months using an attached string.

[0011] In one embodiment of the present invention, the device may be a fluid-filled medical grade plastic ball.

[0012] In an alternative embodiment of the present invention, the device may be a wooden ball coated in a medical grade plastic.

[0013] In an alternative embodiment of the present invention, the device may be a hollow medical grade elastic ball that is fillable, and refillable, with a fluid of desired weight.

[0014] One embodiment of the present invention provides an intrauterine device for insertion into a uterus of a mare to regulate estrous cycle including a hollow ellipsoid having a cavity and sized to be insertable into the uterus of the mare; a string attached to the ellipsoid; a filler filled within the cavity of the hollow ellipsoid wherein the filler is denser than a material of the hollow ellipsoid and wherein the ellipsoid has a greatest outer diameter between 25 and 40 mm and a weight of at least 4 g.

[0015] It is thus a feature of at least one embodiment of the present invention to provide an intrauterine device that is shaped to be easily inserted but retained within a uterus of a mare but can be easily removed by pulling on an attached string when desired.

[0016] The cavity may have a cavity volume of at least 0.45 ml.

[0017] It is thus a feature of at least one embodiment of the present invention to allow for a weighted filler material to be filled in the cavity of the sphere to provide a desirable weight to mimic an embryo and induce chronic uterine inflammation and low-grade prostaglandin (PG) release.

[0018] The filler may be a fluid having a volume of at least 0.2 ml. The fluid may have a density of at least 1 g/ml.

[0019] It is thus a feature of at least one embodiment of the present invention to easily adjust the weight of the sphere by changing the amount of the filler and type of filler with varied densities.

[0020] The filler may be selected from the group consisting of medical grade silicone, wood, saline solution, and brine.

[0021] It is thus a feature of at least one embodiment of the present invention to use high density materials that are biocompatible and increasing the weight of the sphere without increasing the volume of the sphere.

[0022] The string may have a length of at least 10 cm. The string may have a length of at least 20 cm.

[0023] It is thus a feature of at least one embodiment of the present invention to allow the string to extend outwardly from the mare's uterus or vagina and is easily retrievable to be pulled out without having to pull the sphere out from inside the uterus or vagina.

[0024] The string may be selected from the group consisting of rayon and rayon-cotton blend.

[0025] It is thus a feature of at least one embodiment of the present invention to prevent breakage of the string when it is being forcibly pulled to remove the sphere from the uterus.

[0026] The hollow ellipsoid may be at least two joinable components.

[0027] It is thus a feature of at least one embodiment of the present invention to allow the device to be filled with a dense fluid before insertion into the mare to mimic embryo weight.

[0028] The at least two joinable components may be two spherical caps. The two spherical caps may be approximately equal halves of a sphere.

[0029] It is thus a feature of at least one embodiment of the present invention to vary or maximize the amount of fluid that may be filled within the spherical device thus varying or increasing the weight of the sphere.

[0030] The at least two joinable components may be joined through screw threads. The intrauterine device may further comprise a rubber gasket positioned between the two joinable components.

[0031] It is thus a feature of at least one embodiment of the present invention to prevent leakage of the fluid from the device when inside the uterus by providing a watertight seal between the joinable parts.

[0032] The two joinable components may be joinable through a friction fit. The two joinable components may be joinable through a snap fit.

[0033] It is thus a feature of at least one embodiment of the present invention to allow the components to be easily joined by hand and without additional tools.

[0034] The hollow ellipsoid may be a unitary body.

[0035] It is thus a feature of at least one embodiment of the present invention to minimize leaks from the sphere.

[0036] The hollow ellipsoid may have at least one hole. The string may be attachable to the ellipsoid by extending through the at least one hole and tied to secure the string.

[0037] It is thus a feature of at least one embodiment of the present invention to securely join the string to the device while still providing a smooth exterior to the device that minimizes tissue irritation.

[0038] The hole may be selectively closeable by at least one plug.

[0039] It is thus a feature of at least one embodiment of the present invention to permit the filler to be filled within the cavity through small holes in the device which prevent leakage.

[0040] The intrauterine device may further comprise a loop attached to an outer surface of the ellipsoid. The string may be securely attached to the loop.

[0041] It is thus a feature of at least one embodiment of the present invention to securely join the string to the sphere so that it is not accidentally separated from the sphere when the string is pulled.

[0042] A wall of the hollow ellipsoid may be between 1.5 mm and 8 mm. The ellipsoid may be selected from the group consisting of PVC, Polyethylene, PEEK, Polycarbonate, Ultem PEI, Polysulfone, Polypropylene, Polyurethane, any suitable polymer material, any suitable biocompatible material, and any suitable non-biocompatible material that is properly coated with biocompatible material.

[0043] It is thus a feature of at least one embodiment of the present invention to provide a biocompatible material that will not break or separate inside the uterus after an extended period of time.

[0044] One embodiment of the present invention provides a method of inserting an intrauterine device into a uterus of a mare comprising: providing a hollow ellipsoid insertable into the uterus of the mare. A string is fixedly attached to the ellipsoid and facilitates removal of the ellipsoid from the uterus of the mare and a fluid is filled within a cavity of the hollow ellipsoid and has a weight wherein the ellipsoid has a greatest outer diameter between 25 and 40 mm. The method comprises further filling the fluid within the cavity of the hollow ellipsoid; inserting the hollow ellipsoid into the uterus of the mare, and pulling on the string of the hollow ellipsoid to remove the hollow ellipsoid from the uterus of the mare.

[0045] These particular objects and advantages may apply to only some embodiments falling within the claims and thus do not define the scope of the invention.

BRIEF DESCRIPTION OF THE DRAWINGS

[0046] FIG. **1** is an exploded perspective view of the intrauterine device (IUD) of the present invention insertable into a uterus of a mare for suppression of estrus;

[0047] FIG. **2** is a phantom side elevation view of the IUD of FIG. **1** showing the first capsule part attached to a second capsule part via a screw attachment and gasket;

[0048] FIG. **3** is a cross sectional view of the IUD of FIG. **1** showing the first capsule part and second capsule part attached and filled with a fluid;

[0049] FIG. **4** is an exploded perspective view of a second embodiment of the intrauterine device (IUD) of the present invention insertable into a uterus of a mare for suppression of estrus;

[0050] FIG. **5** is a phantom side elevation view of the IUD of FIG. **4** showing the first capsule part attached to a second capsule part via a screw attachment and gasket;

[0051] FIG. **6** is a cross sectional view of the IUD of FIG. **4** showing the first capsule part and second capsule part attached via a screw attachment and filled with a fluid;

[0052] FIG. **7** is an exploded perspective view of a third embodiment of the intrauterine device (IUD) of the present invention insertable into a uterus of a mare for suppression of estrus;

[0053] FIG. **8** is a cross sectional side elevation view of the IUD of FIG. **7** showing the first capsule part and second capsule part attached via a friction fit and filled with a fluid;

[0054] FIG. **9** is an exploded perspective view of a fourth embodiment of the intrauterine device (IUD) of the present invention insertable into a uterus of a mare for suppression of estrus showing push plugs and string removed from openings of the unitary capsule to allow for fluid to be filled into the hollow capsule;

[0055] FIG. **10** is a cross sectional side elevation view of the IUD of FIG. **9** showing the push plugs and string attached to the openings of the unitary capsule and the hollow capsule filled with a fluid; and

[0056] FIG. **11** is a cutaway perspective view of a fifth embodiment of the intrauterine device (IUD) of the present invention insertable into a uterus of a mare for suppression of estrus having an outer layer and an inner layer.

DETAILED DESCRIPTION OF THE PREFERRED EMBODIMENT

[0057] Referring now to FIG. **1** through FIG. **3**, an intrauterine device (IUD) **10** of the present invention may provide a spherical body **12** that may be insertable into a uterus of a mare. The IUD **10** may be inserted using an applicator (not shown) to facilitate the insertion of the IUD **10** into the uterus of the mare. It is understood that the

spherical body **12** may be an ellipsoid that may alternatively take an oblong or oval shape which may generally assist with insertion of the IUD **10** into the uterus of the mare.

[0058] In one embodiment of the present invention, the spherical body **12** may by defined by a first capsule part **14** and a second capsule part **16** that form the spherical body **12** when coupled together. The spherical body **12** is hollow such that the wall **13** of the first capsule part **14** and second capsule part **16** when joined define therebetween an interior spherical cavity **18**. The first capsule part **14** is insertable into the uterus first, and is attachable to the second capsule part **16**, which is insertable into the uterus second and positioned proximate the uterus opening or cervix of the mare once inserted.

[0059] The first capsule part **14** may provide a lower spherical cap that is hollowed out to provide an interior bowl **20**. An interior surface **24** of an upper edge **22** of the first capsule part **14** may include screw threads **26** (e.g., female threads) that receive corresponding screw threads **28** (e.g., male threads) of the second capsule part **16**. It is understood that the female threads and male threads may be interchanged with respect to the first and second capsule parts.

[0060] In one embodiment, the wall **13** of the first capsule part **14** may have an outer radius of between 15-20 mm and approximately 15 mm and approximately 17.50 mm, and an inner radius of between 10-15 mm and approximately 12.50 mm, such that the wall **13** is between 1.5-8 mm and between 3-8 mm and approximately 5 mm.

[0061] The second capsule part **16** may provide an upper spherical cap that is hollowed out to provide an interior bowl **30**. A lower edge **32** of an exterior surface **34** of the second capsule part **16** may include screw threads **28** (e.g., male threads) that are received by the corresponding screw threads **26** (e.g., female threads) of the first capsule part **14**. It is understood that the female threads and male threads may be reversed with respect to the first and second capsule parts.

[0062] In one embodiment, the wall **13** of the second capsule part **16** may have an outer radius of between 15-20 mm and approximately 15 mm and approximately 17.50 mm, and an inner radius of between 10-15 mm and approximately 12.50 mm, such that the thickness of the wall **13** is between 1.5-8 mm and between 3-8 mm and approximately 5 mm.

[0063] The first capsule part **14** and second capsule part **16** may be substantially halves of the sphere and similar in size. The first capsule part **14** and second capsule part **16** may be made out of a biocompatible and medical grade plastic material such as PVC, Polyethylene, PEEK, Polycarbonate, Ultem PEI, Polysulfone, Polypropylene and Polyurethane and the like. It is understood that the material may be any suitable polymer material, any suitable biocompatible material, or any suitable non-biocompatible material that is properly coated with biocompatible material.

[0064] In order to join the first capsule part **14** and the second capsule part **16**, the second capsule part **16** may be finger tightened without the use of tools to the first capsule part **14** by inter-engaging threads **26**, **28** such that the lower edge **32** of the second capsule part **16** is brought into the interior bowl **20** of the first capsule part **14** and abuts an inwardly extending rim **38** of the first capsule part **14** positioned just below the screw threads **26**.

[0065] The inwardly extending rim **38** may support thereon a gasket material **36** such as an O-ring sealing the interface between the inwardly extending rim **38** of the first capsule part **14** and the lower edge **32** of the second capsule part **16**. In one embodiment, the O-ring may have an outer diameter that generally corresponds to an inner diameter of the first capsule part **14** and may be between 25-20 mm and approximately 28 mm and approximately 28.3 mm. The O-ring may be made from PTFE, Nitrile (Buna), Neoprene, EPDM Rubber and Fluorocarbon (Viton) and the like.

[0066] It is understood that any type of connection method may be used to attach and seal the first capsule part **14** and the second capsule part **16** together. In an alternative embodiment of the present invention, the screw threads may be replaced with a press fit connection, friction fit connection, or snap fit connection between the first capsule part **14** and the second capsule part **16**.

[0067] A string end **40** of the second capsule part **16** may include an outwardly projecting loop or ring **42**, or alternatively a pad eye with a metal plate supporting the loop or ring **42**, attached to the string end **40**, that receives a hanging cord or string **44**. The string **44** is tied, knotted, or otherwise securely attached to the ring **42**. The string **44** may be made from a rayon or a rayon-cotton blend material and the like. The string **44** may extend a length approximating a distance between the vagina and uterus of the mare and may be at least 10 cm and at least 20 cm in length. The string **44** may be pulled outward from the vagina to easily remove the spherical body **12** from the uterus of the mare without having to reach into the vagina. The string **44** may be short enough, however, so that it is not accidentally pulled and to prevent accidental removal of the spherical body **12**.

[0068] Referring specifically to FIG. **3**, in use, the interior bowl **20** of the first capsule part **14** may be filled with a fluid **50** prior to the attachment of the second capsule part **16** to form the spherical body **12**. Once the first capsule part **14** and second capsule part **16** are sealably attached, the spherical body **12** may be rotated or flipped such that the fluid **50** flows to fill the interior spherical cavity **18** of the second capsule part **16**. The spherical cavity **18** may have a volume that is between 0.45 ml and 1.3 ml and is at least 0.45 ml and is at least 0.55 ml and is at least 0.65 ml and is at least 0.75 ml and is at least 0.85 ml and is at least 1 ml. A fluid volume of between 0.2 and 0.65 ml and at least 0.2 ml and at least 0.3 ml and at least 0.4 ml and at least 0.5 ml and at least 0.6 ml may be filled into the spherical cavity **18** therefore at least one-half and at least two-thirds and at least three-fourths of the cavity volume of the spherical cavity **18** may be filled with fluid **50**.

[0069] The first capsule part **14** may be inserted into the uterus first, and the second capsule part **16** is positioned proximate the uterus opening or cervix. The string **44** may extend from the spherical body **12** and extend outwardly from the uterus and vagina for ease of removal of the spherical body **12** from the uterus.

[0070] The type of fluid **50**, characteristics of the fluid **50**, or density of the fluid **50** may provide a desirable weight of the spherical body **12**. In one embodiment of the present invention, the fluid **50** is a medical grade water, silicone, saline solution, brine, and the like. The density of the fluid **50** may be between 1 g/ml and 1.045 g/ml and at least 1 g/ml. Generally, the density of the fluid **50** may be greater than the density of the material of the spherical body **12**. In one embodiment, the density of the fluid **50** may be at least twice as dense as the material of the spherical body **12**.

[0071] It is understood that the fluid **50** of the spherical body **12** provides the desired weight to the spherical body **12**. In one embodiment of the present invention, the spherical body **12** has a weight between 4 g and 18 g and at least 4 g and at least 5 g and at least 6 g and at least 7 g and at least 8 g and at least 9 g and at least 10 g and at least 11 g and at least 12 g and at least 13 g and at least 14 g and at least 15 g and at least 16 g and at least 17 g.

[0072] Referring to FIG. **4** through FIG. **6**, an IUD **110** of a second embodiment of the present invention is similar to the embodiment shown in FIGS. **1** through **3**, where similar parts are identified by like reference numerals incremented by 100. However, the second embodiment differs with respect to the shape and size of the first capsule part **14** and second capsule part **16**.

[0073] The IUD **110** of the second embodiment includes a first capsule **114** that is a spherical cap that is about three-fourths a height of the spherical body **112** and a second capsule **116** that is a spherical cap that is about one-fourth the height of the spherical body **112** to allow for a more complete filling of the interior spherical cavity **118** of the spherical body **112** with fluid **50**. In this respect, more weight can be added to the spherical body **112** through the ability to hold additional fluid **50**.

[0074] The first capsule **114** may provide a spherical cap that is three-fourths of a sphere with a top one-fourth spherical cap of the second capsule **116** removed at a string end **140** of the spherical body **112**. The interior of the first capsule **114** is hollowed out to provide an interior bowl **120**.

[0075] In one embodiment, the wall **113** of the first capsule **114** may have an outer diameter between 30-35 mm and approximately 35 mm and an inner diameter between 14-31 mm and approximately 24 mm such that the thickness of the wall **113** is between 2-8 mm and approximately 5.5 mm.

[0076] The second capsule **116** may provide a spherical cap with a bottom three-fourth spherical cap removed from an insertion end opposite the string end **140**. The interior of the second capsule **116** is hollowed out to provide an interior bowl **130**.

[0077] In one embodiment, the wall **113** of the second capsule **116** may have an outer radius of between 15-20 mm and approximately 17.50 mm and an inner radius of between 10-15 mm and approximately 12.00 mm such that the thickness of the wall **113** is between 3-8 mm and approximately 5.5 mm.

[0078] Referring specifically to FIG. **6**, in use, the larger volume interior bowl **120** of the first capsule **114** permits a greater amount of fluid **50** to be filled inside the first capsule **114** prior to the attachment of the second capsule part **16** to form the spherical body **112**. Once the first capsule **114** and second capsule **116** are sealable attached, the spherical body **112** may be rotated or flipped such that the fluid flows to fill the interior spherical cavity **118** of the spherical body **112**.

[0079] The spherical cavity **118** may have a volume between 0.45 ml and 1.3 ml and at least 0.45 ml and at least 0.55 ml and at least 0.65 ml and at least 0.75 ml and at least 0.85 ml and at least 0.95 ml and at least 1.05 ml and at least 1.15 ml. A fluid volume of between 0.34 ml and 0.975 ml and at least 0.34 ml and at least 0.4 ml and at least 0.5 ml and at least 0.6 ml and at least 0.7 ml and at least 0.8 ml and at least 0.9 ml may be filled into the spherical cavity **118** therefore at least one-half and at least two-thirds and at least three-fourths of the cavity volume of the spherical cavity **118** may be filled with fluid **50**. It is understood that the fluid **50** of the spherical body **112** provides the desired weight to the spherical body **112**, and therefore, more weight may be added to the spherical body **112** of the second embodiment by way of more fluid **50**.

[0080] Referring to FIGS. **7** and **8**, an IUD **210** of a third embodiment of the present invention is similar to the embodiments shown in FIGS. **4** through **6**, where similar parts are identified by like reference numerals incremented by 100 (or incremented by 200 with respect to FIG. **1** through FIG. **3**). However, the third embodiment differs with respect to the connection method of the first capsule part **114** and second capsule part **116** and the connection method of the string **44**.

[0081] The second capsule part **216** may be coupled to the first capsule part **14** by a friction fit such that the lower edge **232** of the second capsule part **116** is brought into the interior bowl **220** of the first capsule part **214** and abuts an inwardly extending rim **238** of the first capsule part **214**. The exterior surface **234** of the second capsule part **216** and the interior surface **224** of the upper edge **222** of the first capsule part **214** are two tight fitting mating surfaces which are pressed together to seal the first capsule part **214** and second capsule part **216** by force.

[0082] The inwardly extending rim **238** may support thereon a gasket material **236** such as an O-ring sealing the interface between the inwardly extending rim **238** of the first capsule part **214** and the lower edge **232** of the second capsule part **216**. In one embodiment, the O-ring may have an outer diameter that generally corresponds to an inner diameter of the first capsule part **214** and may be between 25-20 mm and approximately 28 mm and approximately 28.3 mm. The O-ring may be made from PTFE, Nitrile (Buna), Neoprene, EPDM Rubber and Fluorocarbon (Viton) and the like.

[0083] A string end **240** of the second capsule part **216** may include a pair of openings **260** that are joined by a U-shaped channel **262** that extends into the wall **113** of the second capsule **116** a depth that is less than the thickness of the wall **113**. In one embodiment of the present invention, the U-shaped channel **262** extends a depth that is less than one-half and less than one-third and less than one-fourth the thickness of the wall **113** to allow the string **44** to be threaded into one of the pair of openings **260**, through the U-shaped channel **262**, and out through the other of the pair of openings **260** to tie and secure the string **44** to the second capsule part **216**.

[0084] The string **44** may be made from a rayon or a rayon-cotton blend material or the like. The string **44** may extend a length approximating a distance between the vagina and uterus of the mare and may be at least 10 cm and at least 20 cm in length. The string **44** may be pulled outward from the vagina to easily remove the spherical body **12** from the uterus of the mare.

[0085] Referring to FIGS. **9** and **10**, an IUD **310** of a fourth embodiment of the present invention is similar to the embodiment shown in FIGS. **1** through **3**, where similar parts are identified by like reference numerals incremented by 300. However, the third embodiment differs with respect to the form of a spherical body **312** which in this embodiment is a hollowed unitary sphere instead of separate capsule parts forming the spherical body **312**. The spherical body **312** may be an elastic material to assist with insertion of the spherical body **312** into the uterus.

[0086] In use, the spherical body **312** of the fourth embodiment allows for filling of a majority of the interior spherical cavity **318** of the spherical body **312** with fluid **50** through a pair of openings **360** at the string end **362** of the spherical body **312** when the string end **362** of the spherical body **312** is oriented upwards and an insertion end **363** of the spherical body **312** is oriented downwards. The interior spherical cavity **318** may be filled up to a level of the openings **360**. Once the interior spherical cavity **318** has been filled with fluid **50**, the openings **360** at the string end **362** of the spherical body **312** may be plugged with a pair of push plugs **364**.

[0087] Each of the pair of push plugs **364** may include a tapered stopper **366** that is conical or cylindrical in shape and corresponds to a shape of the openings **360**. The push plugs **364** may be made of an elastic material such as rubber, silicone, and the like that prevent the fluid **50** from leaking out from the pair of openings **360** when inserted into the openings **360**.

[0088] An upper end of the push plugs **364** may support a center opening leading to a channel extending through the push plugs **364** to support the string **44** therethrough. Each of the push plugs **364** includes tapered stoppers **366** extending into the openings **360** of the spherical body **312** and supporting an upwardly extending drum **368** and an outer flange **370**. The outer flange **370** generally has a larger diameter than the drum **368** and may support the center opening receiving the string **44**.

[0089] In one embodiment of the present invention, with the spherical body **312** empty, a curved needle may be used to pass the string **44** through a first push plug **364** by threading the string **44** through the center opening of the outer flange **370** and out through the tapered stopper **366**. Then, the curved needle may be passed through a first opening **360** of the spherical body **312** to allow the string **44** to further extend through the interior spherical cavity **318** and out through the second opening **360**. Next, the curved needle is passed through the second push plug **364** through the tapered stopper **366** to extend outward through a center opening of the outer flange **370** of the second push plug **364**. The push plugs **364** can then be pushed into the respective openings **360** with the string **44** extending out from the spherical body **312**. The string **44** can be looped (i.e., loop **372**) and tightened as necessary.

[0090] A syringe may be used to deliver fluid **50** into the interior spherical cavity **318** through the center opening of one of the installed push plugs **364** within the same channel as the string **44** extends through the plug **364**. An adhesive seal may be applied on the installed push plugs **364** around the outer flange **370** to prevent leakage of the fluid **50**.

[0091] Once the interior spherical cavity **318** is filled with fluid **50**, the spherical body **312** may then be rotated such that the string end **362** of the spherical body **312** is oriented downwards and the insertion end **363** of the spherical body **312** is oriented upward so that the fluid **50** flows toward the string end **362** of the spherical body **312**. At least one-half and at least two-thirds and at least three-fourths of the cavity volume of the spherical cavity **18** may be filled with fluid **50**.

[0092] The spherical body **312** may then be inserted into the uterus of the mare with the insertion end **363** of the spherical body **312** inserted first and the string end **362** positioned proximate the uterus opening or cervix.

[0093] The string **44** may allow for the spherical body **312** to be easily removed after insertion of the spherical body **312** inside the uterus of the mare as previously described above.

[0094] It is understood that the fluid **50** assists with providing the desired weight to the spherical body **312**. The fluid **50** may be a heavy, high density fluid providing additional weight to the spherical body **312**.

[0095] Referring to FIG. **11**, an IUD **410** of a fifth embodiment of the present invention is a spherical body **412** that is composed of an interior weighted ball **452** coated or covered by an outer medical grade plastic **454** on an exterior of the ball.

[0096] The interior weighted ball **452** may be made out of a heavy, hard material, such as wood and the like. The outer medical grade plastic **454** may be made out of a biocompatible and medical grade plastic material such as PVC, Polyethylene, PEEK, Polycarbonate, Ultem PEI, Polysulfone, Polypropylene and Polyurethane and the like.

[0097] The spherical body **412** may be similarly sized as the embodiments shown and described in FIGS. **1** through **8**. In this respect, the spherical body **412** may have an outer diameter of between 25-40 mm and approximately 35 mm. It is understood that the spherical body **412** may alternatively take an oblong or oval shape. It is understood that the interior weighted ball **452** provides the desired weight to the spherical body **412** instead of fluid **50**.

[0098] Similar to the embodiments shown and described in FIGS. **1** through **10**, a string **44** may be attached to the spherical body **412** to allow the spherical body **412** to be easily removed after insertion of the spherical body **412** inside the uterus of the mare as previously described above.

[0099] The string **44** may be attached to the outer medical grade plastic **454** using a pair of openings **460** that are joined by a U-shaped channel **464** that extends into the outer medical grade plastic **454** a depth that is less than the thickness of the outer medical grade plastic **454**. In this respect, the string **44** can be threaded through into one of the pair of openings **460**, through the U-shaped channel **464**, and out through the other of the pair of openings **460** to tie and secure the string **44** to the outer medical grade plastic **454**.

[0100] In an alternative embodiment of the present invention, the string **44** may be attached to the outer medical grade plastic **454** using an adhesive such as epoxy, acrylate, silicones and the like.

[0101] Certain terminology is used herein for purposes of reference only, and thus is not intended to be limiting. For example, terms such as "upper," "lower," "above," and "below," refer to directions in the drawings to which reference is made. Terms such as "front," "back," "rear," "bottom," and "side," describe the orientation of portions of the component within a consistent but arbitrary frame of reference which is made clear by reference to the text and the associated drawings describing the component under discussion. Such terminology may include the words specifically mentioned above, derivatives thereof, and words of similar import. Similarly, the terms "first," "second," and other such numerical terms referring to structures do not imply a sequence or order unless clearly indicated by the context.

[0102] When introducing elements or features of the present disclosure and the exemplary embodiments, the articles "a," "an," "the," and "said," are intended to mean that there

are one or more of such elements or features. The terms "comprising", "including," and "having" are intended to be inclusive and mean that there may be additional elements or features other than those specifically noted. It is further to be understood that the method steps, processes, and operations described herein are not to be construed as necessarily requiring their performance in the particular order discussed or illustrated, unless specifically identified as an order of performance. It is also to be understood that additional or alternative steps may be employed.

[0103] It is specifically intended that the present invention not be limited to the embodiments and illustrations contained herein and the claims should be understood to include modified forms of those embodiments including portions of the embodiments and combinations of elements of different embodiments as come within the scope of the following claims. All of the publications described herein, including patents and non-patent publications, are hereby incorporated herein by reference in their entireties.

[0104] To aid the Patent Office and any readers of any patent issued on this application in interpreting the claims appended hereto, applicants wish to note that they do not intend any of the appended claims or claim elements to invoke 35 U.S.C. 112(f) unless the words "means for" or "step for" are explicitly used in the particular claim.

What we claim is:

1. An intrauterine device for insertion into a uterus of a mare to regulate estrous cycle comprising:

a hollow ellipsoid having a cavity and sized to be insertable into the uterus of the mare;

a string attached to the ellipsoid; and

a filler filled within the cavity of the hollow ellipsoid wherein the filler is denser than a material of the hollow ellipsoid;

wherein the ellipsoid has a greatest outer diameter between 25 mm and 40 mm and a weight of at least 4 g.

2. The intrauterine device of claim **1** wherein the cavity has a cavity volume of at least 0.45 ml.

3. The intrauterine device of claim **1** wherein the filler is a fluid having a liquid volume of at least 0.2 ml.

4. The intrauterine device of claim **1** wherein the filler has a density of at least 1 g/ml.

5. The intrauterine device of claim **1** wherein the filler is selected from the group consisting of medical grade silicone, wood, water, saline solution, and brine.

6. The intrauterine device of claim **1** wherein the string has a length of at least 10 cm.

7. The intrauterine device of claim **1** wherein the string is selected from the group consisting of rayon and rayon-cotton blend.

8. The intrauterine device of claim **1** wherein the hollow ellipsoid comprises at least two joinable components.

9. The intrauterine device of claim **8** wherein the hollow ellipsoid is a sphere and the at least two joinable components are spherical caps.

10. The intrauterine device of claim **9** wherein the spherical caps are approximately equal halves of a sphere.

11. The intrauterine device of claim **8** further comprising a rubber gasket positioned between a space between mating surfaces of the two joinable components.

12. The intrauterine device of claim **8** wherein the at least two joinable components are joinable by a first set of screw threads of a first of the at least two joinable components and a second set of screw threads of a second of the at least two joinable components wherein the first and second set of screw threads are mating threads.

13. The intrauterine device of claim **8** wherein the two joinable components are joinable through a friction fit between mating surfaces of the two joinable components.

14. The intrauterine device of claim **1** wherein the hollow ellipsoid is a unitary body.

15. The intrauterine device of claim **1** wherein the hollow ellipsoid has at least one hole extending through a wall of the hollow ellipsoid.

16. The intrauterine device of claim **1** wherein the at least one hole extends to the cavity of the hollow ellipsoid and is closeable by at least one plug.

17. The intrauterine device of claim **1** further comprising a loop attached to an outer surface of the ellipsoid

18. The intrauterine device of claim **1** wherein a wall of the hollow ellipsoid has a thickness that is between 1.5 mm and 8 mm.

19. The intrauterine device of claim **1** wherein the ellipsoid is selected from the group consisting of PVC, Polyethylene, PEEK, Polycarbonate, Ultem PEI, Polysulfone, Polypropylene and Polyurethane.

20. A method of inserting an intrauterine device into a uterus of a mare comprising:

providing a hollow ellipsoid insertable into the uterus of the mare; a string fixedly attached to the ellipsoid and facilitated removal of the ellipsoid from the uterus of the mare; a fluid filled within a cavity of the hollow ellipsoid and having a weight wherein the ellipsoid has a greatest outer diameter between 25 and 40 mm;

filling the fluid within the cavity of the hollow ellipsoid;

inserting the hollow ellipsoid into the uterus of the mare; and

pulling on the string of the hollow ellipsoid to remove the hollow ellipsoid from the uterus of the mare.

* * * * *